Appendix1
ARM920T Introduction

This chapter introduces the ARM920T processor. It contains the following sections:

- *Overview of the ARM920T* on page 1-2.
- *Processor functional block diagram* on page 1-3.

1.1 Overview of the ARM920T

The ARM920T is a member of the ARM9TDMI family of general-purpose microprocessors, which includes:

- ARM9TDMI (ARM9TDMI core)
- ARM940T (ARM9TDMI core plus cache and protection unit)
- ARM920T (ARM9TDMI core plus cache and MMU).

The ARM9TDMI processor core is a Harvard architecture device implemented using a five-stage pipeline consisting of fetch, decode, execute, memory and write stages, and can be provided as a stand-alone core which can be embedded into more complex devices. The stand-alone core has a simple bus interface that allows users to design their own caches/memory systems around it.

The ARM9TDMI family of microprocessors supports both the 32-bit ARM and 16-bit Thumb instruction sets, allowing the user to trade off between high performance and high code density.

The ARM920T is a Harvard cache architecture processor which is targeted at multiprogrammer applications where full memory management, high performance, and low power are all-important. The separate instruction and data caches in this design are 16KB each in size, with an 8-word line length. The ARM920T implements an enhanced ARM Architecture V4 MMU to provide translation and access permission checks for instruction and data addresses.

The ARM920T supports the ARM debug architecture and includes logic to assist in both hardware and software debug. The ARM920T also includes support for coprocessors, exporting the instruction and data buses along with simple handshaking signals.

The ARM920T interface to the rest of the system is via unified address and data buses. This interface is compatible with the *Advanced Microcontroller Bus Architecture* (AMBA) bus scheme, either as a fully compliant AMBA bus master, or as a slave for production test. The ARM920T also has a *TrackingICE* mode which allows an approach similar to a conventional ICE mode of operation.

1.2 Processor functional block diagram

Figure 1-1 shows the functional block diagram of the ARM920T.

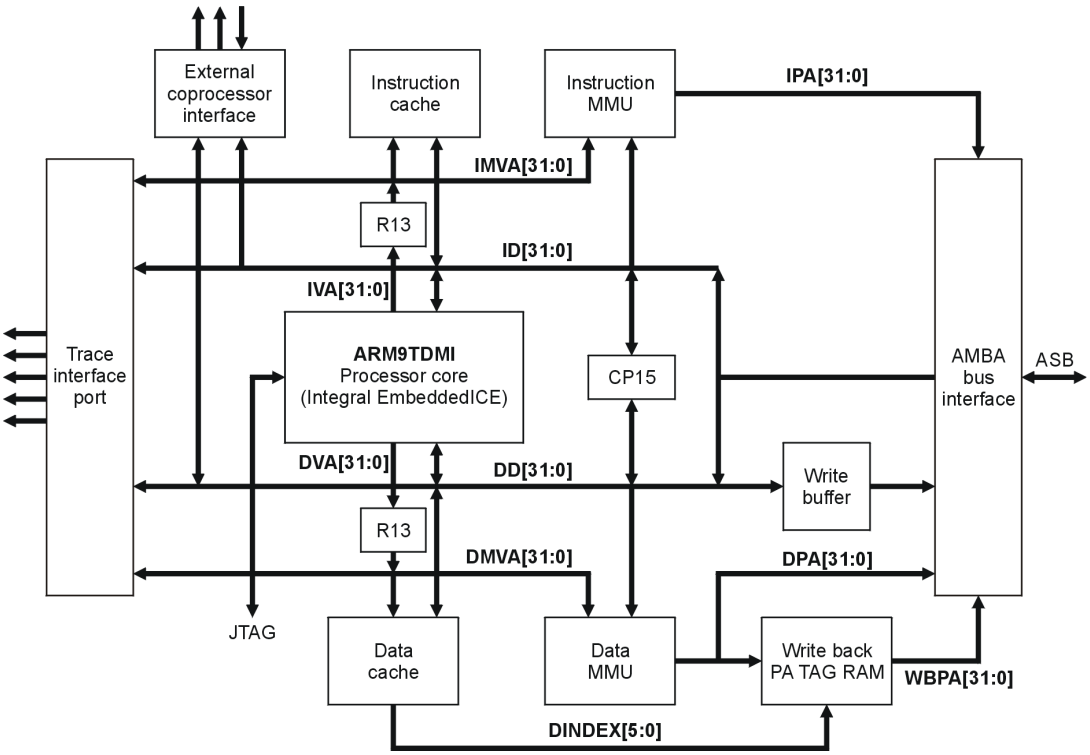

Figure 1-1 ARM920T functional block diagram